IF IN DOUBT ASK

TITLE SHEET

TITLE : 11kV, 1250A, 26.3kA, OUTDOOR TYPE VCB PANEL

CLIENT :

PROJECT : ------

DRG.NO : PB568/100/101/102/201/301/401/501

QTY. : 2Set. (INCOMING CUM OUTGOING VCB PANEL)

PO. NO. : HSP/P.O/VCB/AK/157 DT. 14.11.2022

ABB SYSTEM HOUSE

JOB NO. L-2098

NO.	ECN NO.	REVISION	DATE	CHD.
5				
4				
3				
2				
1				

SCALE N.T.S.

ASIATIC ELECTRICAL & SWITCHGEAR PVT. LTD.
UNIT-1- G-1058-59, RIICO INDUSTRIAL AREA, PHASE-III BHIWADI, DIST. ALWAR, RAJASTHAN -301019, INDIA
UNIT-2- A-783(A) RIICO INDUSTRIAL AREA, PHASE-II BHIWADI, DIST. ALWAR, RAJASTHAN -301019, INDIA

ABB SYSTEM HOUSE

ALL DIMENSIONS ARE IN M.M. AND REQUIREMENT CHANGE AS PER MANUFACTURING REQUIREMENT AND ENGINEERING TOLERANCES.

SHEET NO. 1
NO. OF SHEET 1

TITLE	TITLE SHEET
PRODUCT	11kV,1250A, 26.3kA OUTDOOR VCB PANEL (INCOMING CUM OUTGOING VCB PANEL)
CLIENT	
CONSULTANT	
CUSTOMER	
PROJECT	

DSGN.	AASID
DRN.	AASID
CHD.	G.M. RAI
APPD.	
DATE	15.11.2022
DRG. NO.	PB568/100

THIS DRG.IS THE SOLE PROPERTY OF ASIATIC ELECTRICAL & SWITCHGEAR P. LTD. UNAUTHORISED USE OF THIS DRG. OR MAKING PRODUCT AS PER OUR DRG. WITHOUT OUR PERMISSION OR ANY OTHER MISUSE IS NOT PERMITTED

IF IN DOUBT ASK

LEGENDS

S.No.	SYMBOL	DESCRIPITION	S.No.	SYMBOL	DESCRIPITION
1	TVM	TRI-VECTOR METER	21	TNC	BREAKER CONTROL SWITCH
2	MFM	MULTI FUNCTION METER	22	TTB	TEST TERMINAL BLOCK
3	AVF	AMMETER+VOLTMETER+FREQUENCY METER	23	HT	HOOTER
4	PF	POWER FACTOR METER	24		PUSH BUTTON
5	A+ ASS	AMMETER WITH INBUILT SELECTOR SWITCH	25		ILLUMINATED TYPE PUSH BUTTON
6	V+ VSS	VOLTMETER WITH INBUILT SELECTOR SWITCH	26		EMERGENCY STOP PUSH BUTTON
7	A	AMMETER	27		INDICATION LAMP
8	V	VOLTMETER	28		NORMALLY OPEN CONTACT
9		AMMETER/VOLTMETER/AUTO MANUAL/LOCAL REMOTE SELECTOR SWITCH	29		NORMALLY CLOSE CONTACT
10		VACUUM CIRCUIT BREAKER	30		POTENTIAL TRANSFORMER
11	ANNK	ANNUNCIATOR	31		CURRENT TRANSFORMER
12	(50+51)+ (50+51)N	30/C+1E/F RELAY WITH HIGH SET	32		CONTROL FUSE
13	51+51N	30/C+1E/F RELAY	33		CONTROL MCB
14	64	RESTRICTED E/F RELAY	34		SPACE HEATER
15	87	DIFFERENTIAL E/F RELAY	35		PANEL ILLUMINATION
16	86	MASTER TRIP RELAY	36		DOOR SWITCH
17	95	TRIP CIRCUIT SUPERVISION RELAY	37		TOGGLE SWITCH
18	74	AUX. RELAY FOR TRF. FAULT	38		THERMOSTAT
19	94	ANTI PUMPING RELAY	39		CT SHORTING TERMINAL
20	96	GAS PRESSURE RELAY	40		POWER & CONTROL TERMINAL

ABB SYSTEM HOUSE

JOB NO. L-2098

NO.	ECN NO.	REVISION	DATE	CHD.
5				
4				
3				
2				
1				

SCALE N.T.S.

ASIATIC ELECTRICAL & SWITCHGEAR PVT. LTD.
UNIT-1- G-1058-59, RIICO INDUSTRIAL AREA, PHASE-III BHIWADI, DIST. ALWAR, RAJASTHAN -301019, INDIA
UNIT-2- A-783(A) RIICO INDUSTRIAL AREA, PHASE-II BHIWADI, DIST. ALWAR, RAJASTHAN -301019, INDIA

ABB SYSTEM HOUSE

ALL DIMENSIONS ARE IN M.M. AND REQUIREMENT CHANGE AS PER MANUFACTURING REQUIREMENT AND ENGINEERING TOLERANCES.

SHEET NO. 1
NO. OF SHEET 1

TITLE	LEGENDS
PRODUCT	11kV,1250A, 26.3kA OUTDOOR VCB PANEL (INCOMING CUM OUTGOING VCB PANEL)
CLIENT	
CONSULTANT	
CUSTOMER	
PROJECT	

DSGN.	AASID
DRN.	AASID
CHD.	G.M. RAI
APPD.	
DATE	15.11.2022
DRG. NO.	PB568/101

THIS DRG.IS THE SOLE PROPERTY OF ASIATIC ELECTRICAL & SWITCHGEAR P. LTD. UNAUTHORISED USE OF THIS DRG. OR MAKING PRODUCT AS PER OUR DRG. WITHOUT OUR PERMISSION OR ANY OTHER MISUSE IS NOT PERMITTED

IF IN DOUBT ASK

NOTES FOR HT SWITCH BOARD:–

1. ALL DIMENSIONS ARE IN mm.
2. THE PANELS SHALL BE DUST & VERMIN PROOF, FREE STANDING, FLOOR MOUNTED AND COMPARTMENTALISED.
3. THE PANEL SHALL BE SUITABLE FOR 3Ø, 3W 11kV 50HZ SUPPLY .
4. THE PANEL SHALL BE FABRICATED WITH
   A. SIDE SHEET, PARTITION, EQUIPMENT MOUNTING PLATE, AND FRONT/REAR DOOR/REMOVABLE TOP & BOTTOM SHEET – 2 MM. CRCA.
   B. UNDRILLED REMOVABLE GLAND PLATE – 3 MM. CRCA.
   C. BASE FRAME – – 3 MM. CRCA.
5. EPDM RUBBER GASKET SHALL BE PROVIDED INSIDE THE DOORS TO MAKE THE PANEL DUST AND VERMIN PROOF.
6. THE PANEL SHALL BE PAINTED WITH ELECTRO STATIC POWDER COATING PAINT AFTER 7 TANK PROCESS.
7. BUS BAR SHALL BE OF ELECTROLYTIC GRADE ALUMINIUM AND SUPPORTED ON NON HYGROSCOPIC, NON CARBONISING, CORROSION RESISTANCE, EPOXY RESIN CAST INSULATORS.
8. BUS BAR SHALL BE INSULATED WITH HEAT SHRINKABLE HT SLEEVES.
9. EARTH BUS SHALL BE PROVIDED THROUGHOUT THE PANEL LENGTH.
10. CONTROL WIRING SHALL BE CARRIED OUT WITH 1100V GRADE HT INSULATED COPPER FLEXIBLE WIRE AND FOLLOWING COLOUR STANDARD.
    A. CT CIRCUIT – 2.5 SQ MM RED, YELLOW, BLUE, GREEN
    B. PT CIRCUIT – 2.5 SQ MM RED, YELLOW, BLUE, BLACK
    C. AC CONTROL CKT. – 2.5 SQ MM RED, BLACK
    D. DC CIRCUIT – 2.5 SQ MM GRAY
    E. INTER PANEL – 2.5 SQ MM BLACK/GRAY
    F. GROUNDING – 2.5 SQ MM GREEN
11. THE MINIMUM CLEARANCE/CREPAGE DISTANCE IN MAIN BUSBARS SHALL BE AS FOLLOWS :
    A. BETWEEN PHASE TO PHASE – 110 MM
    C. BETWEEN PHASE TO EARTH – 80 MM
12. BLACK ALUMINUM COMPUTERIZED PRINTED NAME PLATE SHALL BE PROVIDED ON EACH PANEL.

ABB SYSTEM HOUSE

JOB NO. L-2098

NO.	ECN NO.	REVISION	DATE	CHD.
5				
4				
3				
2				
1				

SCALE N.T.S.

ASIATIC ELECTRICAL & SWITCHGEAR PVT. LTD.
UNIT-1- G-1058-59, RIICO INDUSTRIAL AREA, PHASE-III BHIWADI, DIST. ALWAR, RAJASTHAN -301019, INDIA
UNIT-2- A-783(A) RIICO INDUSTRIAL AREA, PHASE-II BHIWADI, DIST. ALWAR, RAJASTHAN -301019, INDIA

ABB SYSTEM HOUSE

ALL DIMENSIONS ARE IN M.M. AND REQUIREMENT CHANGE AS PER MANUFACTURING REQUIREMENT AND ENGINEERING TOLERANCES.

SHEET NO. 1
NO. OF SHEET 1

TITLE	GENERAL NOTES
PRODUCT	11kV,1250A, 26.3kA OUTDOOR VCB PANEL (INCOMING CUM OUTGOING VCB PANEL)
CLIENT	
CONSULTANT	
CUSTOMER	
PROJECT	

DSGN.	AASID
DRN.	AASID
CHD.	G.M. RAI
APPD.	
DATE	15.11.2022
DRG. NO.	PB568/102

THIS DRG.IS THE SOLE PROPERTY OF ASIATIC ELECTRICAL & SWITCHGEAR P. LTD. UNAUTHORISED USE OF THIS DRG. OR MAKING PRODUCT AS PER OUR DRG. WITHOUT OUR PERMISSION OR ANY OTHER MISUSE IS NOT PERMITTED

IF IN DOUBT ASK

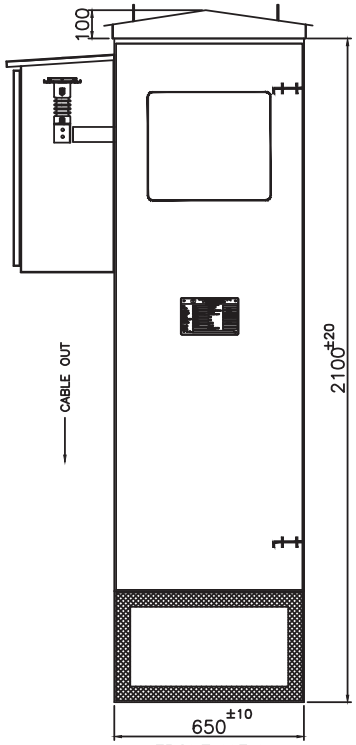

FRONT VIEW
WITH OUTER DOOR

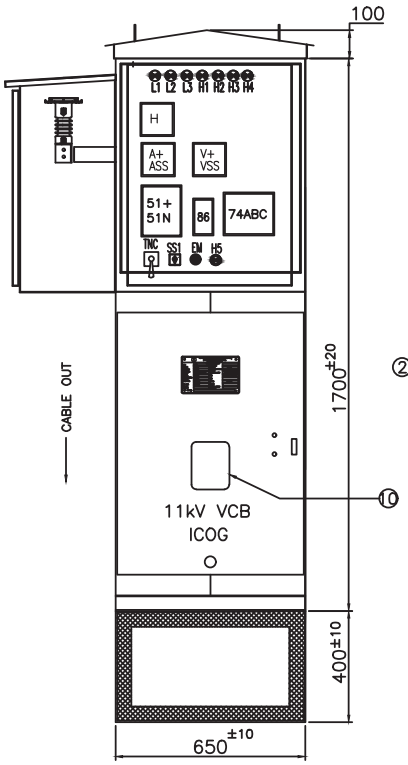

FRONT VIEW

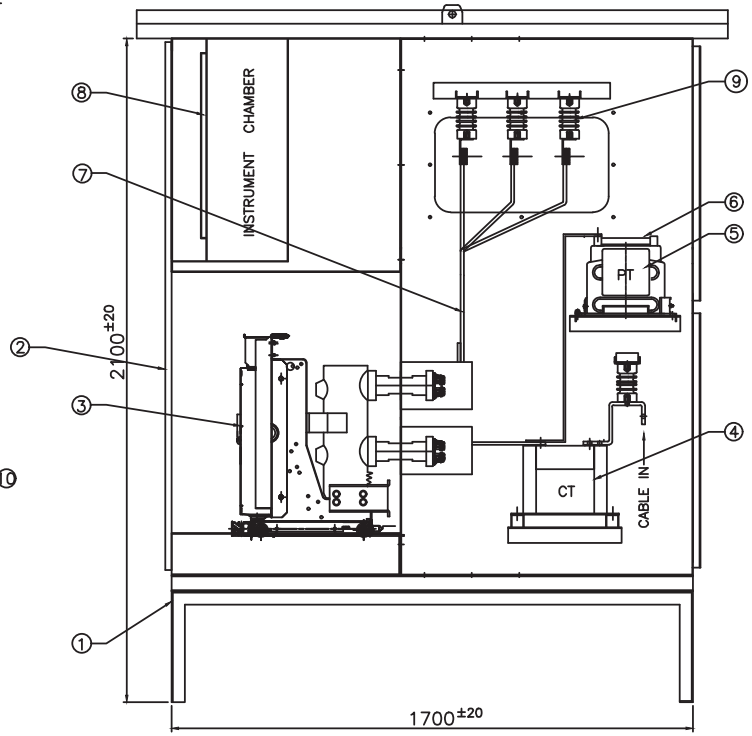

SIDE VIEW

NOTE:- DIMENSION, ORIENTATION & LAYOUT OF DRAWING MAY CHANGE DURING DETAILED ENGINEERING

ABB SYSTEM HOUSE

QTY. 2NOS.

JOB NO. L-2098

NO.	ECN NO.	REVISION	DATE	CHD.
5				
4				
3				
2				
1				

SCALE N.T.S.

ASIATIC ELECTRICAL & SWITCHGEAR PVT. LTD.
UNIT-1- G-1058-59, RIICO INDUSTRIAL AREA, PHASE-III BHIWADI, DIST. ALWAR, RAJASTHAN -301019, INDIA
UNIT-2- A-783(A) RIICO INDUSTRIAL AREA, PHASE-II BHIWADI, DIST. ALWAR, RAJASTHAN -301019, INDIA

ABB SYSTEM HOUSE

ALL DIMENSIONS ARE IN M.M. AND REQUIREMENT CHANGE AS PER MANUFACTURING REQUIREMENT AND ENGINEERING TOLERANCES.

SHEET NO. 1
NO. OF SHEET 2

TITLE	GENERAL ARRANGEMENT
PRODUCT	11kV,1250A, 26.3kA OUTDOOR VCB PANEL (INCOMING CUM OUTGOING VCB PANEL)
CLIENT	
CONSULTANT	
CUSTOMER	
PROJECT	

DSGN.	AASID
DRN.	AASID
CHD.	G.M. RAI
APPD.	
DATE	15.11.2022
DRG. NO.	PB568/201

THIS DRG.IS THE SOLE PROPERTY OF ASIATIC ELECTRICAL & SWITCHGEAR P. LTD. UNAUTHORISED USE OF THIS DRG. OR MAKING PRODUCT AS PER OUR DRG. WITHOUT OUR PERMISSION OR ANY OTHER MISUSE IS NOT PERMITTED

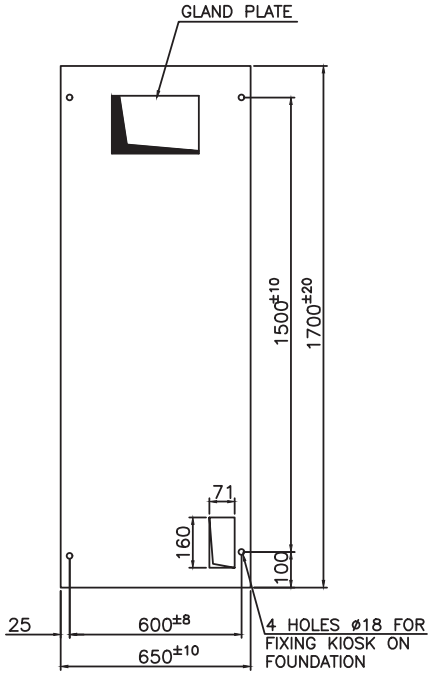

FOUNDATION PLAN

LEGENDS	DESCRIPTION
51+51N	– 3O/C +1E/F NUMERICAL RELAY
86	– MASTER TRIP RELAY
74ABC	– AUX. RELAY FOR TRF. FAULTS
A+ASS	– DIGITAL AMMETER WITH ASS
MFM	– DIGITAL VOLTMETER WITH VSS
TNC	– BREAKER CONTROL SWITCH
SS1	– SELECTOR SWITCH L/R
L1	– 'R' PHASE INDICATION
L2	– 'Y' PHASE INDICATION
L3	– 'B' PHASE INDICATION
H1	– 'R' BREAKER ON INDICATION
H2	– 'G' BREAKER OFF INDICATION
H3	– 'A' BREAKER TRIP INDICATION
H4	– 'B' SPRING CHARGE INDICATION
H5	– 'R' TRIP CIRCUIT HELATHY ILL. P.B.
EM	– EMERGENCY PUSH BUTTON
H	– HOOTER

IF IN DOUBT ASK

S.NO.	DESCRIPTION
A.	SHEET THICKNESS:
I)	2mm FOR NON LOAD BEARING MEMBERS
II)	2mm FOR LOAD BEARING MEMBERS
III)	3mm FOR GLAND PLATE
IV)	3mm FOR BASE FRAME
B.	FINISH : RAL 7032
C.	CABLE ENTRY: BOTTOM
D.	BUS BAR: ALUMINIUM
I)	1 x 50 x 12 SQ.MM. PER PHASE FOR MAIN
II)	1 x 50 x 6 SQ.MM. FOR MAIN EARTH
III)	1 x 25 x 3 SQ.MM. FOR P.T. DROPPER
E.	BUS BAR CLEARANCE
I)	PHASE TO PHASE : NOT LESS THAN 110mm
II)	PHASE TO EARTH : NOT LESS THAN 80mm
III)	PHASE IDENTIFICATION : COLOUR STICKER
IV)	BUS BAR INSULATOR : 11KV
	DESCRIPTION
1.	SUPPORT STRUCTURE
2.	OUTDOOR TYPE VCB HT PANEL
3.	11kV,1250A,26.3kA EDO VCB FOR O/D
	APPLICATION
4.	C.T. RATIO 300–150/5–5A : 3Nos.
5.	SINGLE PHASE FIXED TYPE P.T. : 3Nos.
6.	PT FUSE : 3Nos.
7.	BUSBAR (HT SLEEVED) : AS REQ.
8.	INSTRUMENT CHAMBER DOOR : 1No.
9.	INSPECTION WINDOW : 1No.
10.	BUSBAR SUPPORT INSULATOR : AS REQ.

UNSPECIFIED TOLERANCE

ABOVE	UPTO & INCLUDING	TOL.
0.5	6.0	±0.1
6.0	30.0	±0.3
30.0	120.0	±0.5
120.0	315.0	±1.0
315.0	1000.0	±2.0
1000.0	2500.0	±3.0

NOTE:- DIMENSION, ORIENTATION & LAYOUT OF DRAWING MAY CHANGE DURING DETAILED ENGINEERING

ABB SYSTEM HOUSE

QTY. 2NOS.

JOB NO. L-2098

NO.	ECN NO.	REVISION	DATE	CHD.
5				
4				
3				
2				
1				

SCALE N.T.S.

ASIATIC ELECTRICAL & SWITCHGEAR PVT. LTD.
UNIT-1- G-1058-59, RIICO INDUSTRIAL AREA, PHASE-III BHIWADI, DIST. ALWAR, RAJASTHAN -301019, INDIA
UNIT-2- A-783(A) RIICO INDUSTRIAL AREA, PHASE-II BHIWADI, DIST. ALWAR, RAJASTHAN -301019, INDIA

ABB SYSTEM HOUSE

ALL DIMENSIONS ARE IN M.M. AND REQUIREMENT CHANGE AS PER MANUFACTURING REQUIREMENT AND ENGINEERING TOLERANCES.

SHEET NO. 2
NO. OF SHEET 2

TITLE	GENERAL ARRANGEMENT
PRODUCT	11kV,1250A, 26.3kA OUTDOOR VCB PANEL (INCOMING CUM OUTGOING VCB PANEL)
CLIENT	
CONSULTANT	
CUSTOMER	
PROJECT	

DSGN.	AASID
DRN.	AASID
CHD.	G.M. RAI
APPD.	
DATE	15.11.2022
DRG. NO.	PB568/201

THIS DRG.IS THE SOLE PROPERTY OF ASIATIC ELECTRICAL & SWITCHGEAR P. LTD. UNAUTHORISED USE OF THIS DRG. OR MAKING PRODUCT AS PER OUR DRG. WITHOUT OUR PERMISSION OR ANY OTHER MISUSE IS NOT PERMITTED

IF IN DOUBT ASK

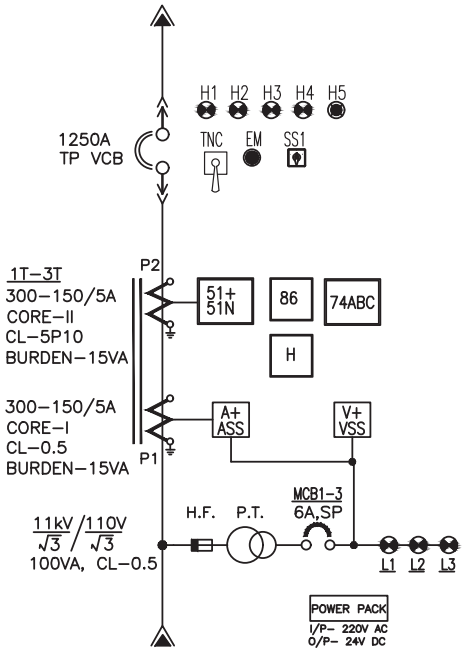

FEEDER No.	--
FEEDER RATING	1250A
FEEDER DESCRIP–TION	INCOMING CUM OUTGOING
CABLE SIZE IN mm2	--
SCH.DRW. MODULE	--

ABB SYSTEM HOUSE

QTY. 2NOS.

JOB NO. L-2098

NO.	ECN NO.	REVISION	DATE	CHD.
5				
4				
3				
2				
1				

SCALE N.T.S.

ASIATIC ELECTRICAL & SWITCHGEAR PVT. LTD.

UNIT-1- G-1058-59, RIICO INDUSTRIAL AREA, PHASE-III BHIWADI, DIST. ALWAR, RAJASTHAN -301019, INDIA

UNIT-2- A-783(A) RIICO INDUSTRIAL AREA, PHASE-II BHIWADI, DIST. ALWAR, RAJASTHAN -301019, INDIA

ABB SYSTEM HOUSE

ALL DIMENSIONS ARE IN M.M. AND REQUIREMENT CHANGE AS PER MANUFACTURING REQUIREMENT AND ENGINEERING TOLERANCES.

SHEET NO. 1
NO. OF SHEET 1

TITLE	SINGLE LINE DIAGRAM
PRODUCT	11kV,1250A, 26.3kA OUTDOOR VCB PANEL (INCOMING CUM OUTGOING VCB PANEL)
CLIENT	
CONSULTANT	
CUSTOMER	
PROJECT	

DSGN.	AASID
DRN.	AASID
CHD.	G.M. RAI
APPD.	
DATE	15.11.2022
DRG. NO.	PB568/301

THIS DRG.IS THE SOLE PROPERTY OF ASIATIC ELECTRICAL & SWITCHGEAR P. LTD. UNAUTHORISED USE OF THIS DRG. OR MAKING PRODUCT AS PER OUR DRG. WITHOUT OUR PERMISSION OR ANY OTHER MISUSE IS NOT PERMITTED

IF IN DOUBT ASK

BILL OF MATERIAL

S.No.	LEGENDS	DESCRIPTION	MAKE	TYPE	RATING	QTY.
		VACUUM CIRCUIT BREAKER				
1	VCB	11kV 1250A VACCUM CIRCUIT BREAKER DRAW OUT TYPE HAVING FOLLOWING ACCESSORIES. 220V AC SPRING CHARGING MOTOR 24V DC CLOSING COIL 24V DC SHUNT TRIP COIL AUX. CONTACT: 6NO+6NC OPERATING COUNTER MECHANICAL ON/OFF PUSH BUTTONS MECHANICAL INDICATORS FOR ON/OFF, SPRING CHARGED/DISCHARGED MANUAL SPRING CHARGING DEVICE.	ABB	V–D4	1250A, TP, 26.3kA–3SEC.	01
		PROTECTION RELAYS & ACCESSORIES				
2	51+51N	3 O/C +1 EARTH/FAULT NUMERICAL RELAY	C&S	CSENEX101	24V DC, CTR/5A	01
3	86	MASTER TRIP RELAY	C&S	CLR	24V DC	01
4	74ABC	AUX. RELAY 3 ELEMENT FOR TRF. PROTECTION	C&S	CAR	24V DC	01
5	AP	PLA RELAY WITH BASE FOR ANTI PUMPING	ABB/PLA	94	24V DC, 2C/O	01
		INSTRUMENT TRANSFORMERS				
6	C.T.	DUAL CORE, DUAL RATIO CURRENT TRANSFORMER 11kV RESIN CAST TYPE	SAVIO/AVCON/ NORTEX	WPL, RESIN CAST	RATIO: 300–150/5A–5A CORE–1:15VA CL–0.5 CORE–2:15VA CL–5P10	03
7	P.T.	POTENTIAL TRANSFOMRER OUTDOOR SINGLE PHASE RESIN CAST, FIXED TYPE		RESIN CAST	RATIO:11KV/$\sqrt{3}$/110V/$\sqrt{3}$, 100VA, CL –0.5	03
		FUSE				
8	H.F.	12KV,3.15A P.T. FUSE LINKS	PANICKKER/ REPUTED	--	3.15A,11KV	03
		METERS				
9	V+VSS	DIGITAL VOLTMETER WITH INBUILT VSS FLUSH TYPE, 96 Sq.mm	SECURE/ ELMEASURE	--	PTR 11KV/110V AC	01
10	A+ASS	DIGITAL AMMETER WITH INBUILT ASS FLUSH TYPE, 96 Sq.mm		--	CTR / 5A, CL–0.5	01

ABB SYSTEM HOUSE

QTY. 2NOS.

THIS DRG.IS THE SOLE PROPERTY OF ASIATIC ELECTRICAL & SWITCHGEAR P. LTD. UNAUTHORISED USE OF THIS DRG. OR MAKING PRODUCT AS PER OUR DRG. WITHOUT OUR PERMISSION OR ANY OTHER MISUSE IS NOT PERMITTED

JOB NO. L-2098

NO.	ECN NO.	REVISION	DATE	CHD.
5				
4				
3				
2				
1				

SCALE N.T.S.

ASIATIC ELECTRICAL & SWITCHGEAR PVT. LTD.
UNIT-1- G-1058-59, RIICO INDUSTRIAL AREA, PHASE-III BHIWADI, DIST. ALWAR, RAJASTHAN -301019, INDIA
UNIT-2- A-783(A) RIICO INDUSTRIAL AREA, PHASE-II BHIWADI, DIST. ALWAR, RAJASTHAN -301019, INDIA

ABB SYSTEM HOUSE

ALL DIMENSIONS ARE IN M.M. AND REQUIREMENT CHANGE AS PER MANUFACTURING REQUIREMENT AND ENGINEERING TOLERANCES.

SHEET NO. 1
NO. OF SHEET 3

TITLE	BILL OF MATERIAL
PRODUCT	11kV,1250A, 26.3kA OUTDOOR VCB PANEL (INCOMING CUM OUTGOING VCB PANEL)
CLIENT	
CONSULTANT	
CUSTOMER	
PROJECT	

DSGN.	AASID
DRN.	AASID
CHD.	G.M. RAI
APPD.	
DATE	15.11.2022
DRG. NO.	PB568/401

IF IN DOUBT ASK

BILL OF MATERIAL

S.No.	LEGENDS	DESCRIPTION	MAKE	TYPE	RATING	QTY.
		INDICATING LIGHTS				
11	L1	RED	ABB/ESSBEE	LED	63.5V AC	01
	L2	YELLOW				01
	L3	BLUE				01
	H1	RED			24V DC	01
	H2	GREEN				01
	H3	AMBER				01
	H4	BLUE				01
		PUSH BUTTON				
12	H5	RED ILLUMINATED PUSH BUTTON	ABB/ESSBEE	LED	24V DC	01
		CONTROL MCB				
13	MCB	MINIATURE CIRCUIT BREAKER	ABB/HAVELLS	SP, 10KA	6A	09
				DP, 10KA	6A	02
		MISCELLANOUS				
14	PP	POWER PACK 220V AC/24V DC, 7AH	MAHAMAI/ADITYA	7 AH	24V DC	01
15	SH	HOOTER 96 SQ.MM.	ADITYA	----	24V DC	01
16	SH	SPACE HEATER	HOTWELL	STRIPS	100WATT, 230V AC	01
17	TH	THERMOSTAT	ELCON	1 C/O	30-110DEG. 230V AC	01
18	SSW	SINGLE PHASE THREE PIN PLUG & SOCKET	ANCHOR	3PIN	15A, 240V AC	01
19	DS	DOOR LIMIT SWITCH FOR CUBICAL LAMP	KAYCEE	2A	230V AC	01
20	NL	NEUTRAL LINK	FTC	----	32A	03
21	EM	EMERGENCY PUSH BUTTON	ESBEE	----	2NO+1NC	01
22	SS1	SELECTOR SWITCH	SALZER	2P 2W WITH OFF	6A	01
23	LED	LED FOR PANEL ILLUMINATION	SYSKA/CROMPTON	5W, LED	240V AC	01
24	--	HOLDER FOR PANEL ILLUMINATION	ANCHOR	--	--	01
25	TS	TOGGLE SWITCH FOR HEATER	KAYCEE	---	10A	01
26	TNC	BREAKER CONTROL SWITCH	SALZER	TNC	25A 1NO+NC	01
27	CTL	CT TERMINAL 6MM	CONNECTWEL	----	----	20
28	--	STOPPER AND END PLATE FOR CT TERMINAL	CONNECTWEL	----	----	03

ABB SYSTEM HOUSE

QTY. 2NOS.

JOB NO. L-2098

NO.	ECN NO.	REVISION	DATE	CHD.
5				
4				
3				
2				
1				

SCALE N.T.S.

ASIATIC ELECTRICAL & SWITCHGEAR PVT. LTD.
UNIT-1- G-1058-59, RIICO INDUSTRIAL AREA, PHASE-III BHIWADI, DIST. ALWAR, RAJASTHAN -301019, INDIA
UNIT-2- A-783(A) RIICO INDUSTRIAL AREA, PHASE-II BHIWADI, DIST. ALWAR, RAJASTHAN -301019, INDIA

ABB SYSTEM HOUSE

ALL DIMENSIONS ARE IN M.M.AND REQUIREMENT CHANGE AS PER MANUFACTURING REQUIREMENT AND ENGINEERING TOLERANCES.

SHEET NO. 2
NO. OF SHEET 3

TITLE	BILL OF MATERIAL
PRODUCT	11kV,1250A, 26.3kA OUTDOOR VCB PANEL (INCOMING CUM OUTGOING VCB PANEL)
CLIENT	
CONSULTANT	
CUSTOMER	
PROJECT	

DSGN.	AASID
DRN.	AASID
CHD.	G.M. RAI
APPD.	
DATE	15.11.2022
DRG. NO.	PB568/401

THIS DRG.IS THE SOLE PROPERTY OF ASIATIC ELECTRICAL & SWITCHGEAR P. LTD. UNAUTHORISED USE OF THIS DRG. OR MAKING PRODUCT AS PER OUR DRG. WITHOUT OUR PERMISSION OR ANY OTHER MISUSE IS NOT PERMITTED

IF IN DOUBT ASK

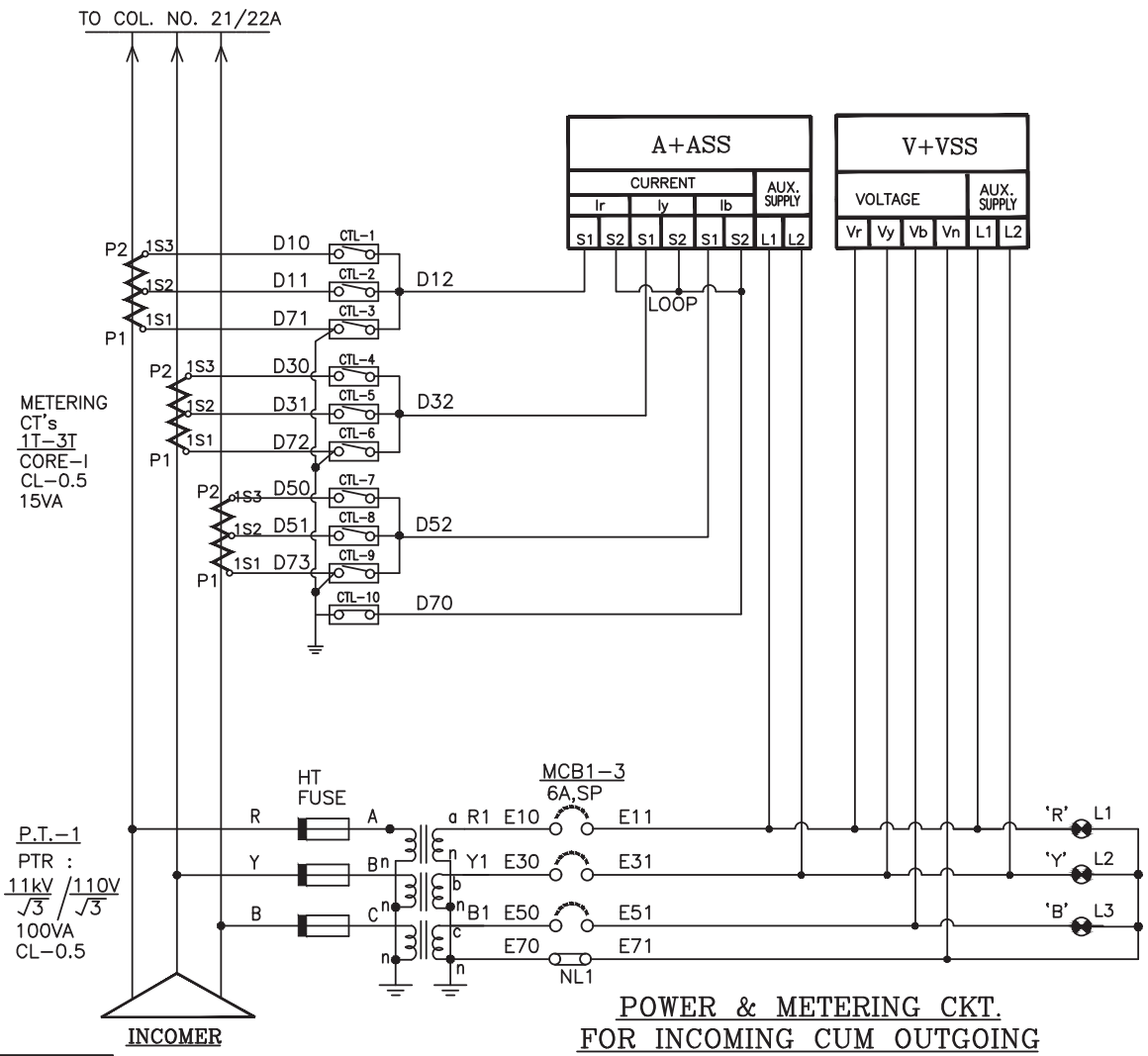

POWER & METERING CKT.
FOR INCOMING CUM OUTGOING

ABB SYSTEM HOUSE

JOB NO. L-2098

NO.	ECN NO.	REVISION	DATE	CHD.
5				
4				
3				
2				
1				

SCALE N.T.S.

ASIATIC ELECTRICAL & SWITCHGEAR PVT. LTD.
UNIT-1- G-1058-59, RIICO INDUSTRIAL AREA, PHASE-III BHIWADI, DIST. ALWAR, RAJASTHAN -301019, INDIA
UNIT-2- A-783(A) RIICO INDUSTRIAL AREA, PHASE-II BHIWADI, DIST. ALWAR, RAJASTHAN -301019, INDIA

ABB SYSTEM HOUSE

ALL DIMENSIONS ARE IN M.M. AND REQUIREMENT CHANGE AS PER MANUFACTURING REQUIREMENT AND ENGINEERING TOLERANCES.

SHEET NO. 1
NO. OF SHEET 6

TITLE	SCHEMATIC DIAGRAM
PRODUCT	11kV,1250A, 26.3kA OUTDOOR VCB PANEL (INCOMING CUM OUTGOING VCB PANEL)
CLIENT	
CONSULTANT	
CUSTOMER	
PROJECT	

DSGN.	AASID
DRN.	AASID
CHD.	G.M. RAI
APPD.	
DATE	15.11.2022
DRG. NO.	PB568/501

THIS DRG.IS THE SOLE PROPERTY OF ASIATIC ELECTRICAL & SWITCHGEAR P. LTD. UNAUTHORISED USE OF THIS DRG. OR MAKING PRODUCT AS PER OUR DRG. WITHOUT OUR PERMISSION OR ANY OTHER MISUSE IS NOT PERMITTED

IF IN DOUBT ASK

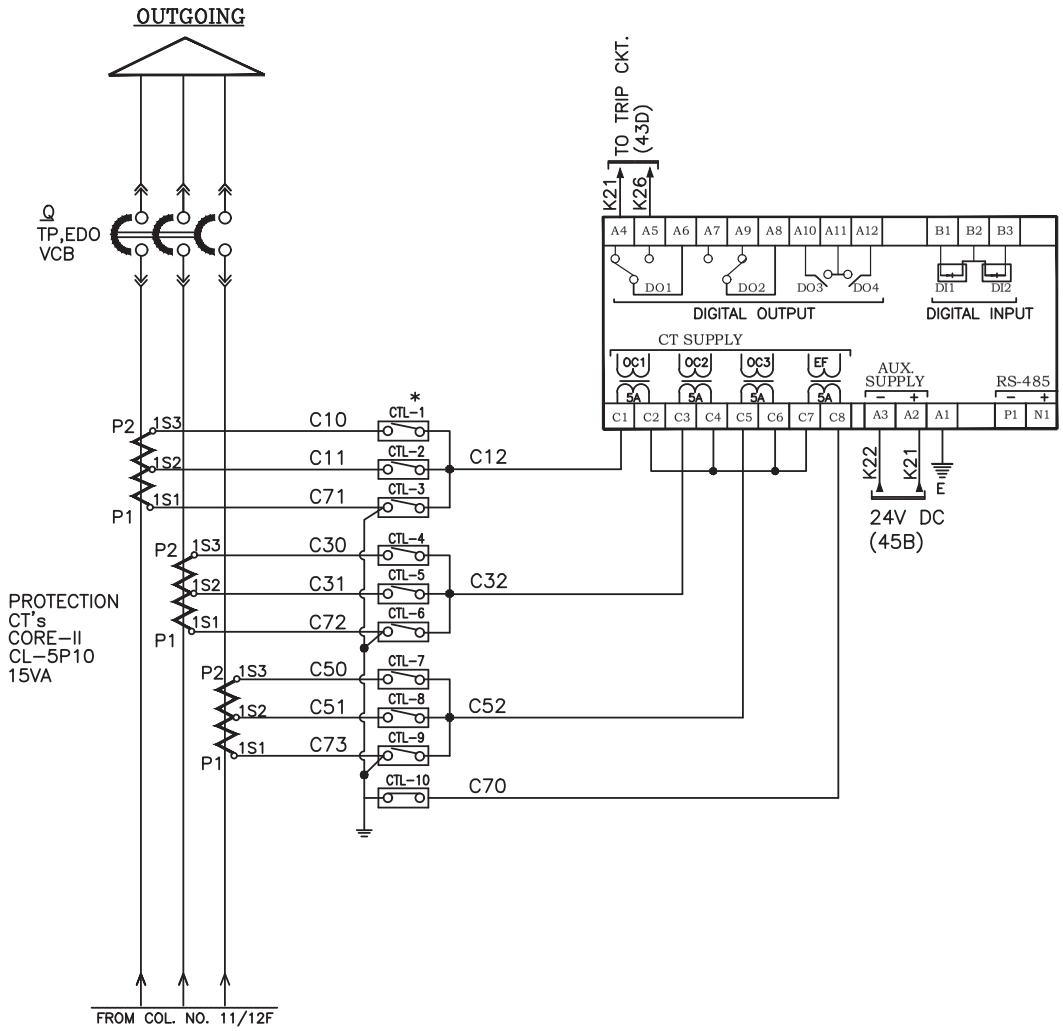

POWER & METERING CKT.
FOR INCOMING CUM OUTGOING

ABB SYSTEM HOUSE

JOB NO. L-2098

NO.	ECN NO.	REVISION	DATE	CHD.
5				
4				
3				
2				
1				

SCALE N.T.S.

ASIATIC ELECTRICAL & SWITCHGEAR PVT. LTD.
UNIT-1- G-1058-59, RIICO INDUSTRIAL AREA, PHASE-III BHIWADI, DIST. ALWAR, RAJASTHAN -301019, INDIA
UNIT-2- A-783(A) RIICO INDUSTRIAL AREA, PHASE-II BHIWADI, DIST. ALWAR, RAJASTHAN -301019, INDIA

ABB SYSTEM HOUSE

ALL DIMENSIONS ARE IN M.M. AND REQUIREMENT CHANGE AS PER MANUFACTURING REQUIREMENT AND ENGINEERING TOLERANCES.

SHEET NO. 2
NO. OF SHEET 6

TITLE	SCHEMATIC DIAGRAM
PRODUCT	11kV,1250A, 26.3kA OUTDOOR VCB PANEL (INCOMING CUM OUTGOING VCB PANEL)
CLIENT	
CONSULTANT	
CUSTOMER	
PROJECT	

DSGN.	AASID
DRN.	AASID
CHD.	G.M. RAI
APPD.	
DATE	15.11.2022
DRG. NO.	PB568/501

THIS DRG.IS THE SOLE PROPERTY OF ASIATIC ELECTRICAL & SWITCHGEAR P. LTD. UNAUTHORISED USE OF THIS DRG. OR MAKING PRODUCT AS PER OUR DRG. WITHOUT OUR PERMISSION OR ANY OTHER MISUSE IS NOT PERMITTED

IF IN DOUBT ASK

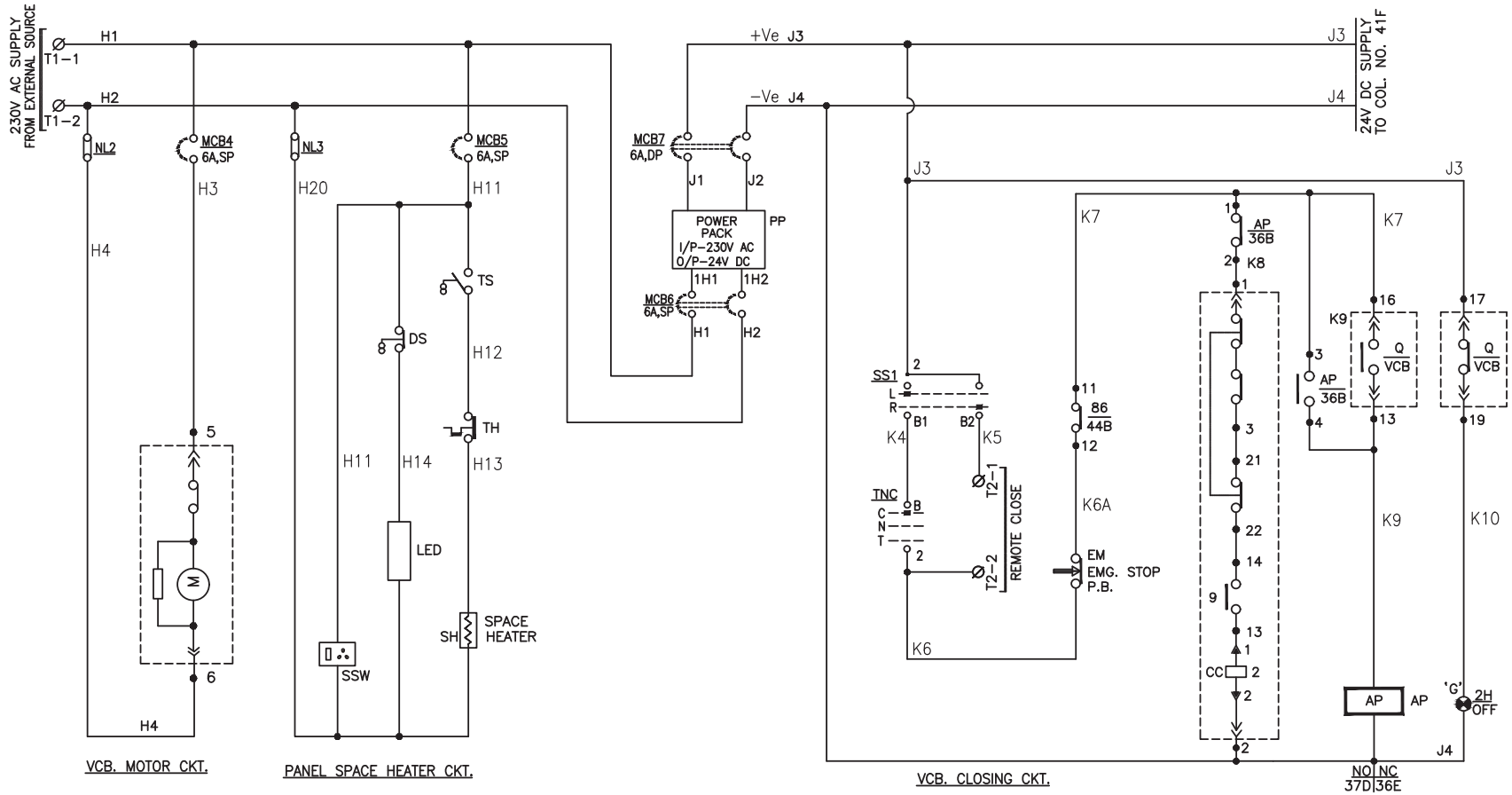

CONTROL CKT. DIAGRAM FOR INCOMING CUM OUTGOING

ABB SYSTEM HOUSE

JOB NO. L-2098

NO.	ECN NO.	REVISION	DATE	CHD.
5				
4				
3				
2				
1				

SCALE N.T.S.

ASIATIC ELECTRICAL & SWITCHGEAR PVT. LTD.

UNIT-1- G-1058-59, RIICO INDUSTRIAL AREA, PHASE-III BHIWADI, DIST. ALWAR, RAJASTHAN -301019, INDIA

UNIT-2- A-783(A) RIICO INDUSTRIAL AREA, PHASE-II BHIWADI, DIST. ALWAR, RAJASTHAN -301019, INDIA

ABB SYSTEM HOUSE

ALL DIMENSIONS ARE IN M.M. AND REQUIREMENT CHANGE AS PER MANUFACTURING REQUIREMENT AND ENGINEERING TOLERANCES.

SHEET NO. 3
NO. OF SHEET 6

TITLE	SCHEMATIC DIAGRAM
PRODUCT	11kV,1250A, 26.3kA OUTDOOR VCB PANEL (INCOMING CUM OUTGOING VCB PANEL)
CLIENT	
CONSULTANT	
CUSTOMER	
PROJECT	

DSGN.	AASID
DRN.	AASID
CHD.	G.M. RAI
APPD.	
DATE	15.11.2022
DRG. NO.	PB568/501

THIS DRG.IS THE SOLE PROPERTY OF ASIATIC ELECTRICAL & SWITCHGEAR P. LTD. UNAUTHORISED USE OF THIS DRG. OR MAKING PRODUCT AS PER OUR DRG. WITHOUT OUR PERMISSION OR ANY OTHER MISUSE IS NOT PERMITTED

IF IN DOUBT ASK

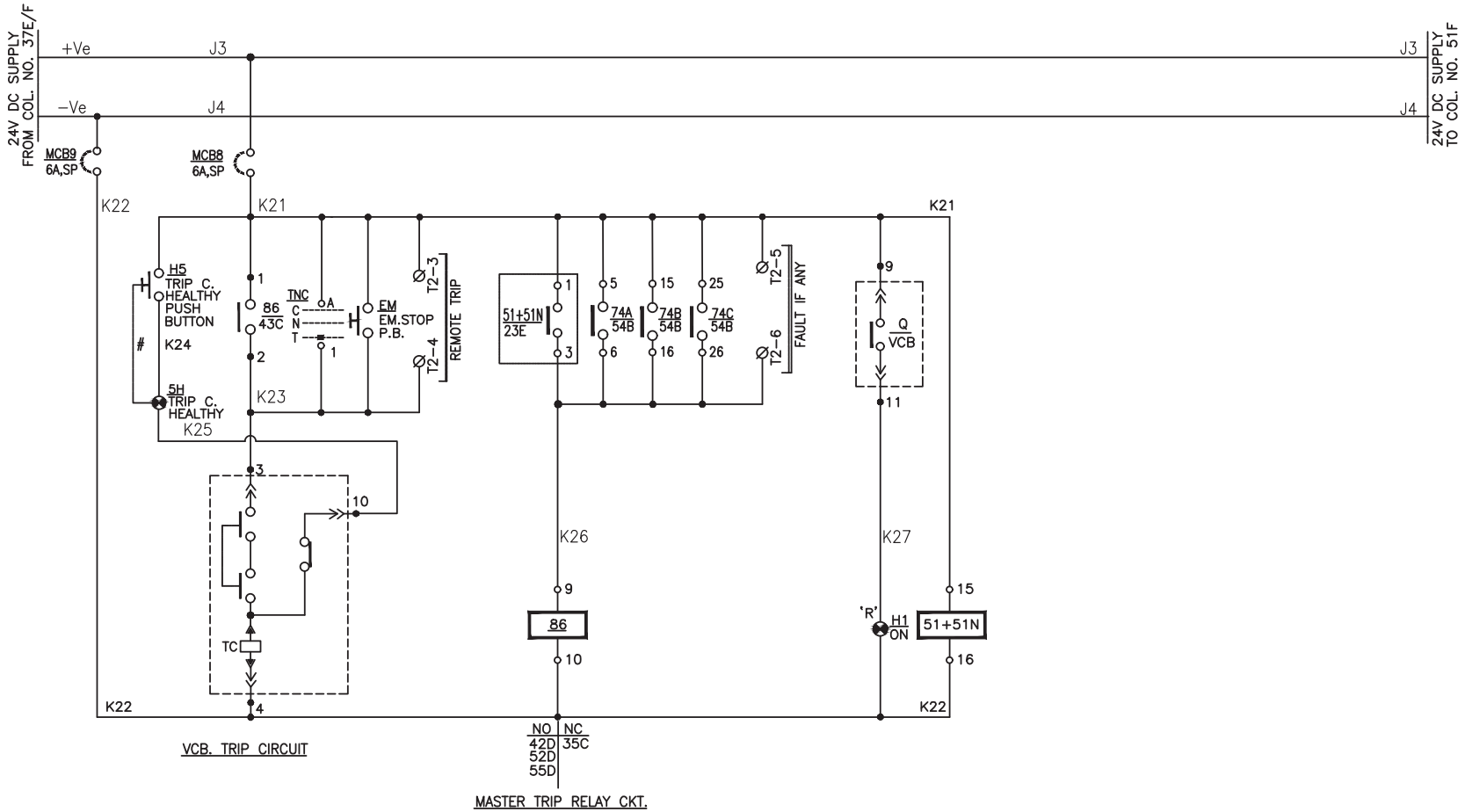

CONTROL CKT. DIAGRAM
FOR INCOMING CUM OUTGOING

ABB SYSTEM HOUSE

JOB NO. L-2098

NO.	ECN NO.	REVISION	DATE	CHD.
5				
4				
3				
2				
1				

SCALE N.T.S.

ASIATIC ELECTRICAL & SWITCHGEAR PVT. LTD.
UNIT-1- G-1058-59, RIICO INDUSTRIAL AREA, PHASE-III BHIWADI, DIST. ALWAR, RAJASTHAN -301019, INDIA
UNIT-2- A-783(A) RIICO INDUSTRIAL AREA, PHASE-II BHIWADI, DIST. ALWAR, RAJASTHAN -301019, INDIA

ABB SYSTEM HOUSE

ALL DIMENSIONS ARE IN M.M. AND REQUIREMENT CHANGE AS PER MANUFACTURING REQUIREMENT AND ENGINEERING TOLERANCES.

SHEET NO. 4
NO. OF SHEET 6

TITLE	SCHEMATIC DIAGRAM
PRODUCT	11kV,1250A, 26.3kA OUTDOOR VCB PANEL (INCOMING CUM OUTGOING VCB PANEL)
CLIENT	
CONSULTANT	
CUSTOMER	
PROJECT	

DSGN.	AASID
DRN.	AASID
CHD.	G.M. RAI
APPD.	
DATE	15.11.2022
DRG. NO.	PB568/501

THIS DRG.IS THE SOLE PROPERTY OF ASIATIC ELECTRICAL & SWITCHGEAR P. LTD. UNAUTHORISED USE OF THIS DRG. OR MAKING PRODUCT AS PER OUR DRG. WITHOUT OUR PERMISSION OR ANY OTHER MISUSE IS NOT PERMITTED

IF IN DOUBT ASK

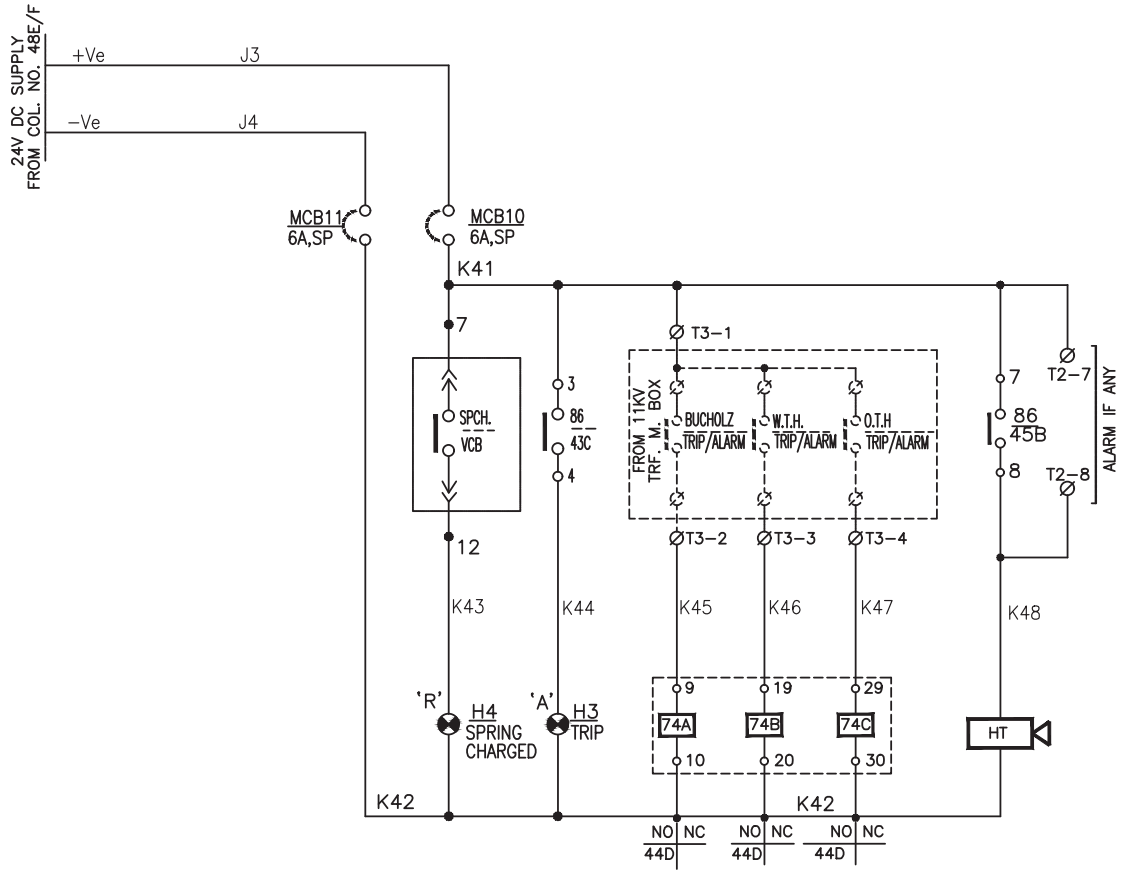

CONTROL CKT. DIAGRAM
FOR INCOMING CUM OUTGOING

ABB SYSTEM HOUSE

JOB NO. L-2098

NO.	ECN NO.	REVISION	DATE	CHD.
5				
4				
3				
2				
1				

SCALE N.T.S.

ASIATIC ELECTRICAL & SWITCHGEAR PVT. LTD.
UNIT-1- G-1058-59, RIICO INDUSTRIAL AREA, PHASE-III BHIWADI, DIST. ALWAR, RAJASTHAN -301019, INDIA
UNIT-2- A-783(A) RIICO INDUSTRIAL AREA, PHASE-II BHIWADI, DIST. ALWAR, RAJASTHAN -301019, INDIA

ABB SYSTEM HOUSE

ALL DIMENSIONS ARE IN M.M. AND REQUIREMENT CHANGE AS PER MANUFACTURING REQUIREMENT AND ENGINEERING TOLERANCES.

SHEET NO. 5
NO. OF SHEET 6

TITLE	SCHEMATIC DIAGRAM
PRODUCT	11kV,1250A, 26.3kA OUTDOOR VCB PANEL (INCOMING CUM OUTGOING VCB PANEL)
CLIENT	
CONSULTANT	
CUSTOMER	
PROJECT	

DSGN.	AASID
DRN.	AASID
CHD.	G.M. RAI
APPD.	
DATE	15.11.2022
DRG. NO.	PB568/501

THIS DRG.IS THE SOLE PROPERTY OF ASIATIC ELECTRICAL & SWITCHGEAR P. LTD. UNAUTHORISED USE OF THIS DRG. OR MAKING PRODUCT AS PER OUR DRG. WITHOUT OUR PERMISSION OR ANY OTHER MISUSE IS NOT PERMITTED

IF IN DOUBT ASK

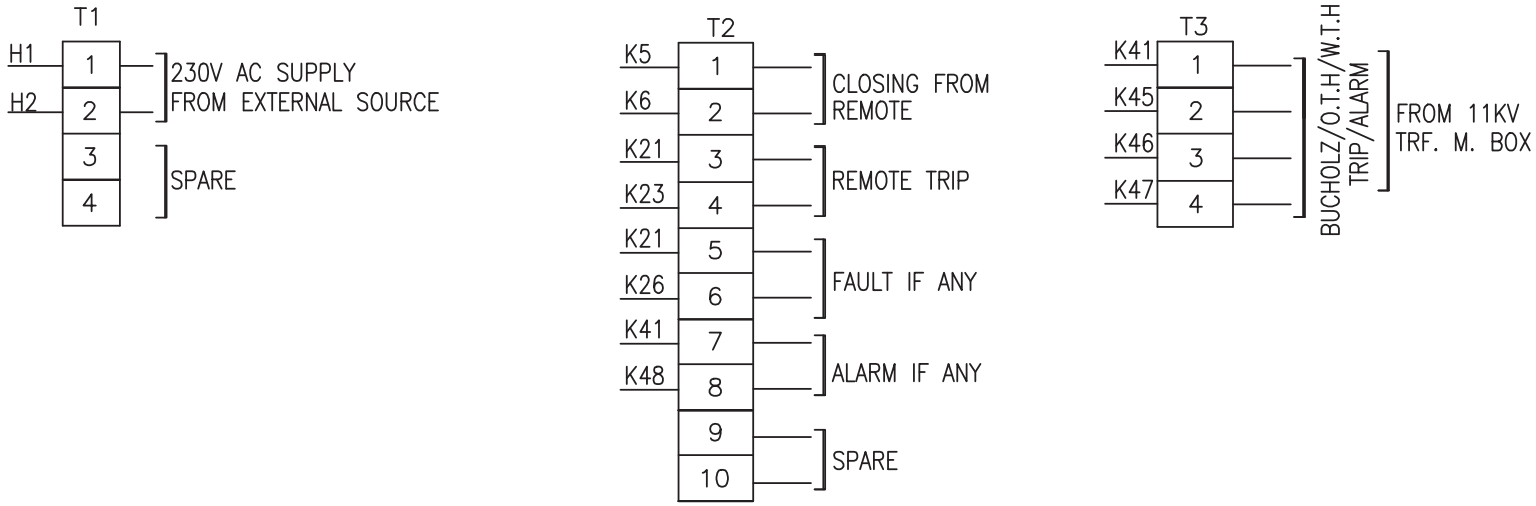

TERMINAL DETAIL
FOR INCOMING CUM OUTGOING

ABB SYSTEM HOUSE

JOB NO. L-2098

NO.	ECN NO.	REVISION	DATE	CHD.
5				
4				
3				
2				
1				

SCALE N.T.S.

ASIATIC ELECTRICAL & SWITCHGEAR PVT. LTD.
UNIT-1- G-1058-59, RIICO INDUSTRIAL AREA, PHASE-III BHIWADI, DIST. ALWAR, RAJASTHAN -301019, INDIA
UNIT-2- A-783(A) RIICO INDUSTRIAL AREA, PHASE-II BHIWADI, DIST. ALWAR, RAJASTHAN -301019, INDIA

ABB SYSTEM HOUSE

ALL DIMENSIONS ARE IN M.M. AND REQUIREMENT CHANGE AS PER MANUFACTURING REQUIREMENT AND ENGINEERING TOLERANCES.

SHEET NO. 6
NO. OF SHEET 6

TITLE	SCHEMATIC DIAGRAM
PRODUCT	11kV,1250A, 26.3kA OUTDOOR VCB PANEL (INCOMING CUM OUTGOING VCB PANEL)
CLIENT	
CONSULTANT	
CUSTOMER	
PROJECT	

DSGN.	AASID
DRN.	AASID
CHD.	G.M. RAI
APPD.	
DATE	15.11.2022
DRG. NO.	PB568/501

THIS DRG.IS THE SOLE PROPERTY OF ASIATIC ELECTRICAL & SWITCHGEAR P. LTD. UNAUTHORISED USE OF THIS DRG. OR MAKING PRODUCT AS PER OUR DRG. WITHOUT OUR PERMISSION OR ANY OTHER MISUSE IS NOT PERMITTED